WHEELRESTORE

PROFESSIONAL ALLOY WHEEL REPAIR EQUIPMENT

Prepare · Repair · Refinish



Designed & manufactured in Denmark
wheelrestore.com

HBC SMART REPAIR
EQUIPMENT & SOLUTIONS

Every wheel tells a story.

Wheel Restore is a brand of HBC Group, a Danish engineering company with more than a decade of experience developing Smart Repair and purpose-built alloy wheel repair equipment. Our machines are designed from the ground up for one job: restoring wheels to an OEM-quality finish — faster, more precisely, and with less operator input than any comparable system on the market. Compact enough for a van. Precise enough for a dealership. Intelligent enough to run itself.



Operating in 40+ countries

The range supports dealerships, tyre centres, body shops, mobile operators & independent repair businesses worldwide.

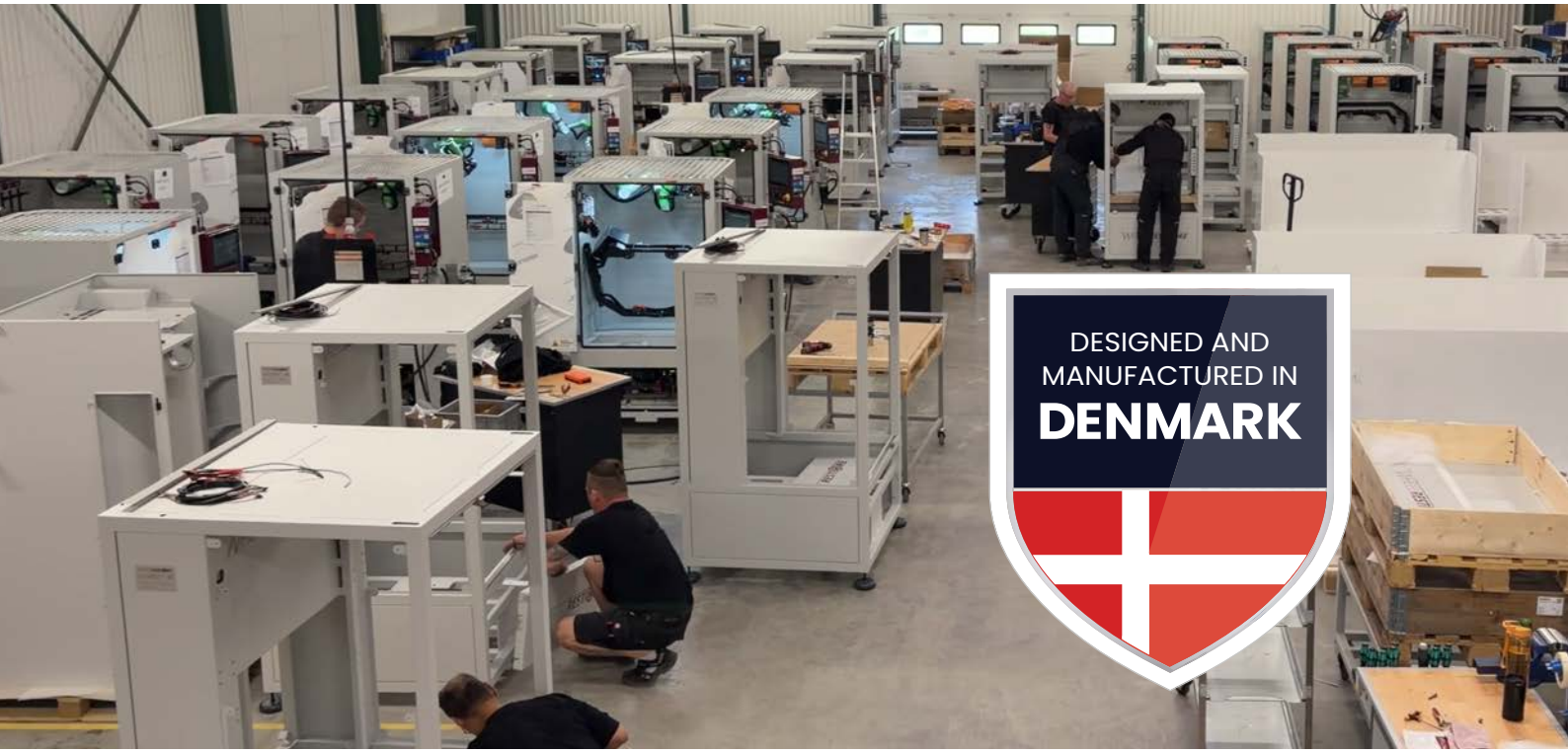

Electronic components by Schneider Electric and Festo. Built to international CE standards.

FULL PRODUCT RANGE

One catalogue. One complete workflow.

The Repair Workflow 04
Prepare · Repair · Refinish — the three-step process

Diamond Cut Machine - WR-DCM3 06
Laser probing · Software · specifications

Wheel Blasting Machine - WM750 / WM710 10
Auto & manual configurations · filtration system

Aluminium Spraying Machine - ASM 12
Cold spray · no heat · no welding required

Auto Wheel Paint Machine - WM600 / WM650 14
World's first fully automated wheel painting machine · Tyre-on wheel painting machine

Wheel Straightener - WM350 / WM350-1 / WM300 20
Electrohydraulic wheel straightener · w/ built-in tyre bead breaker or compact

Workshop Equipment & Wheel Spray Booth 22
Tyre bead breaker · State-of-the-art spray booth · Dual wheel prep

Universal Spare Wheel - WM50 24
Roll & spin modes · EV-ready · strong durable construction

OEM Wheel Paint Mixing System 26
100+ OEM-matched colours · WP300 / WP600 / 998v2

Consumables & Accessories 28
Cutting tips · tape · clearcoats · wheel paints · blasting powder

SAS Portal & Wheel Restore App 30
Connected workshop · live status · repair card documentation

Getting Started 32
3 ownership paths · service agreement benefits

Mobile Setup 34
Van & trailer installation

ROI report 36
Return on investment · contact us or book a demo

HOW IT WORKS

THREE STEPS. ONE COMPLETE REPAIR.

Alloy wheel repairs require different processes, from surface preparation and straightening to cutting and refinishing.

Our dedicated machines support each stage individually, giving you the flexibility to bring selected capabilities in-house or create a connected workflow.

Start with one process or build a complete in-house solution, from surface preparation through to the final documented repair.

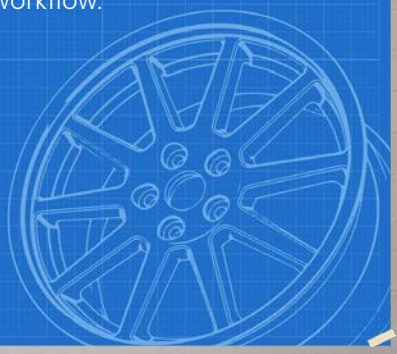







1 Prepare

Strip & blast the surface - prepare every spoke, corner and contour in 3–5 minutes.

2 Repair

Straighten buckles, then laser-probe and cut to OEM precision - automatically.

3 Refinish

Paint, cure and back on the car - fully automated from primer to clearcoat.

From damaged wheel to documented repair



1 Prepare - Strip & blast the surface

Before any cutting or painting can happen, the wheel surface must be fully prepared. Our semi-automatic blasting machine does this in 3–5 minutes, reaching every spoke, corner and contour that manual sanding misses. The result is a clean, consistent substrate that paint and clearcoat can properly bond to. For structural damage, gouges or missing metal, the ASM fills and rebuilds before blasting is complete.

- Wheel Blasting Machine (WM750)
- Aluminium Spraying Machine (ASM)



2 Repair - Straighten, then cut to perfection

The WM350 electrohydraulic straightener removes buckles and flat spots before cutting. The diamond cut machine then performs ultra-precise micrometre adjustments — automatically laser-probing the wheel profile and cutting to your chosen quality setting. No operator guesswork. The machine maps and cuts the profile in a single automated pass, with the option of AI handling edge damage correction.

- Diamond Cut Machine (DCM3)
- Wheel Straightener (WM350)



3 Refinish - Paint, cure & back on the car

The painting robot handles primer, base colour and clear coat automatically. Start it and walk away — the wheel is cured and ready to refit when you return. Built-in IR and UV curing means typical full-cycle times of under 30 minutes from first coat to finished wheel.

- Auto Wheel Paint Machine (WM600)
- OEM Wheel Paint System

One	OEM	Multiple
operator needed	quality finish	repairs in parallel

WR-DCM3 · WM800

DIAMOND CUT WHEEL MACHINE



- 15 min. average cycle time per wheel
- Repairs diamond cut wheels up to 30"
- Tyre-On Capability
- Light enough to install in the back of a van
- Movable with a standard pallet jack
- Runs off a single-phase socket - fully portable

The smarter way to restore diamond cut alloys

Purpose-built for wheel restoration. Nothing else.

The WR-DCM3 has been designed from the ground up as a refinishing machine for damaged alloy wheels. It produces a better finish than many larger machines while being much faster and significantly smaller - giving you better turnaround times and more workshop space.

The intuitive, step-by-step AI software guides operators through the entire process, so no CNC training or experience is required to get professional results from day one.



Laser Probing System
Automated laser scans the wheel profile in under 1 minute — 5× faster and significantly more accurate than mechanical probing. Works with or without tyre mounted.

Touch screen operation
Clear icon-based UI developed specifically for wheel repair. Simple process guides ensure operator mistakes are reduced and minimal training is required.

Quick settings
3 easy modes with pre-defined settings for tool cut depth, feed rate and RPM — making it faster and easier to cut a rim without remembering settings.

Repeat function
Set the machine to make up to 3 cuts without the operator present. Freeing up time to work on other tasks while a rim is being cut.

Auto position
Machine calibrates the distance from laser to cutting tool — giving a faster, more accurate result every time without manual setup.

Diagnostics screen
Full overview of sensors, laser, buttons and software. Assists in better remote support and troubleshooting without a site visit.

CE COMPLIANT Meets ISO 23125:2015 (Machine tools–Safety–Turning Machines). Full risk assessment guides and EU Declaration of Conformity included.

Closed keyboard-&-mouse systems
Many machines on the market run on a fixed interface - once installed, the software is effectively frozen. New features mean new hardware, and screens designed for an office desk, not a workshop floor.



The WR-DCM3 approach
A platform that takes software updates directly through the same touchscreen, so machines already in a workshop can gain new capability over time.



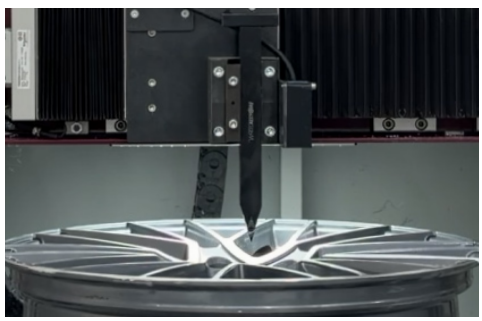



Next level software

Smarter. Faster. Sharper.

Every new WR-DCM3 is capable of running 5.0 AI Software - the next generation of Diamond Cut Machine technology, turning a specialist machining process into a clear, AI-assisted operator sequence while keeping manual control available for experienced technicians.

+370% faster wheel scanning*

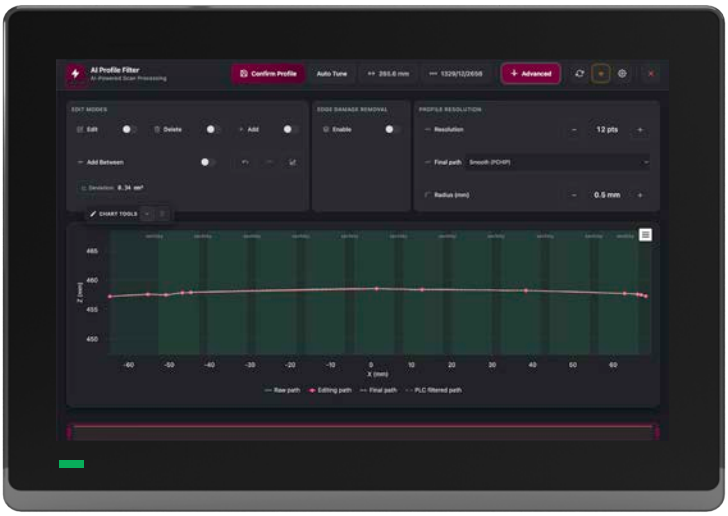

AI Filter - Precision Perfected

Runs through millions of virtual filter combinations to automatically find the ideal type, strength and sequence of filters for each section of the wheel, adapting dynamically to capture every curve, lip and contour.

RESULT: Exceptional cutting precision, flawless OEM-quality finish.

AI Profile Visualizer

Cleans, refines and optimises scan data automatically. Drag to reshape, see instant feedback, and reach ready-to-cut precision in seconds.

RESULT: Smoother profiles, cleaner cuts, fewer reworks.

AI-Powered Cutting Settings

Automatically calculates and applies the ideal spindle speed, feed rate and depth of cut for each wheel — adapting to rim shape and alloy type, and extending tool life with smart load and temperature control.

RESULT: Zero setup, zero rework, 100% precision.

Smarter damage correction

The operator scans just the damaged section — depth and length — and the software adjusts the cut path to remove material only where needed, preserving the rim's original OEM profile.

RESULT: Seamless repairs, less material removed.

Visual Documentation Reminders

Operators are prompted to take before-and-after photos directly from the HMI, ensuring full traceability and customer transparency for every repair.

RESULT: Improved quality assurance and accountability.

Predictive Maintenance Notifications

Intelligent system alerts for cleaning and maintenance, including laser cleaning reminders, on adaptive schedules based on real machine usage.

RESULT: Stay productive, precise and ahead of downtime.



* Scanning speed improvement measured against the previous DCM software generation. The DCM hardware is unchanged — precision-engineered in Denmark, renowned for its durability, accuracy and simplicity.

Precision without complexity

Purpose-built hardware and intelligent software work together to make diamond cutting faster, easier and more repeatable. From laser scanning to the final cut, the WR-DCM3 reduces operator input while preserving full control and delivering a consistent OEM-quality finish.

Compact, accurate and continuously evolving through software — a diamond cut machine designed around wheel repair, not adapted to it.



How does it compare?

Equivalent machines*	WR-DCM3
Weight: 5,070 lbs / 2300kg	Weight: 992 lbs / 450kg
Max dia. 28"	Max dia. 30"
Accuracy < 0.0393"	Accuracy < 0.0005"
Probing: 3-5 minutes	Probing: ~1 minute
Total cycle: 30–60 min, operator present	~15 min (<5 min active work)
Tyre must be removed	Works with or without tyre
Manual setup for each wheel	3 preset modes, quick settings
Manual restart between passes	Up to 3 passes, automated
Small / non-touch display	12" industrial touchscreen
Often three-phase power	230V single-phase, 16A
Heavy-duty forklift	Standard pallet jack
* Equivalent machines available in the European market	

Note: probing/accuracy figures above reflect the WR-DCM3's laser hardware versus competitor mechanical probing. The +370% scanning speed figure on previous page refers to Software 5.0 AI's processing improvement over the previous DCM software generation — the two are complementary, not duplicate claims.

Technical specifications

Dimensions (L×W×H)	39 × 40 × 67 in	990 × 1020 × 1690 mm
Weight	992 lbs	450 kg
X axis travel	25.78 in	655 mm
Z axis travel	13.77 in	350 mm
Measure accuracy	< 0.0005 in	< 0.013 mm
Max wheel diameter	30"	
Display	12" industrial touchscreen	
Speed of probing	~1 minute	
Noise level	Ultra-quiet operation	
temperature range	Minimum 41°F / 5°C	
Compliance	CE · ISO 23125:2015	
Power supply	230 / 110V, 16 Amps	

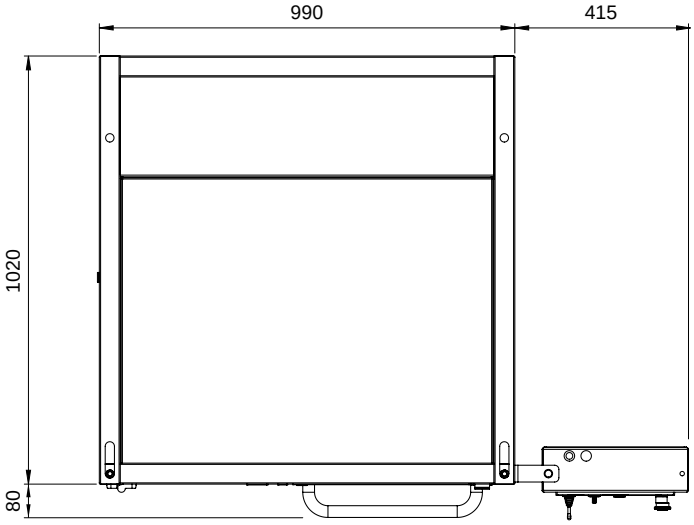

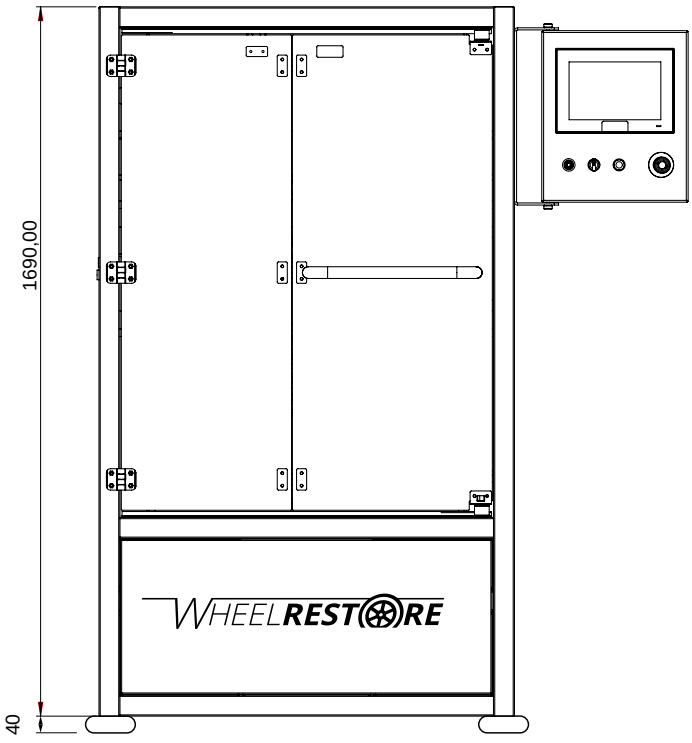

WM750 / WM710

WHEEL BLASTING MACHINE



- Canopy opening with lift supports
- Ergonomic electric wheel loader
- Built-in filtration & cyclone system
- ATEX-approved exhaust fan
- Average blast time: 3-5 min per wheel
- Blast powder reused. 9-10g per wheel (avg.)
- Media types incl. - Fine, Medium, Coarse
- Handles painted & diamond cut wheels

Precision surface preparation, every time

The WM750 is engineered to transform your surface preparation process. This heavy-duty, compact machine efficiently handles both painted and diamond cut wheels. Unlike traditional sandblasting, our blasting powder can be reused multiple times — significantly reducing waste and consumable cost.

Adjustable blasting
Customise angles with ease for full coverage of every spoke, corner and contour.

Intuitive software
Built-in material change reminders and diagnostics - always know when media needs topping up.

Quick settings
Easily adjust blasting powder intensity for different wheel types and surface conditions.

Waste disposal system
Simplified material change process for minimal downtime between jobs.

Low power consumption
Energy-efficient 280W operation for low running costs. Single-phase 220–240V power supply.

Lightweight design
Easily transportable for both mobile and static applications. Simple to ship or move.

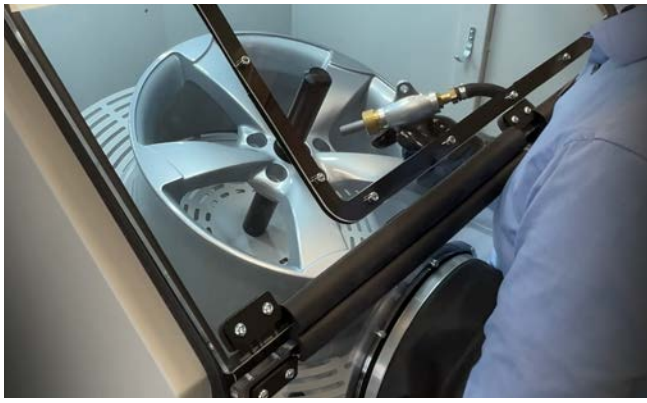



Dimensions (H×W×L)	72.8 × 39.4 × 39.4 in	1850 × 1000 × 1000 mm
Rotating table Ø	27.5"	
Power consumption	280 W	
Exhaust fan	900 m³/h max	
Fan Type	ATEX exhaust fan	
Compressed air	8.8–35.3 CFM	250 to 1,000 L/m
Power supply	110 V or 230 V, 1-phase, 50/60 Hz, 10 A, 1.0 kW	

Built-in Filtration & Cyclone System

The cyclone system significantly minimises waste. It effectively filters out non-reusable powder, allowing repeated media use with an average consumption of just 9–10g per wheel. The filtration system includes a durable polyester filter cartridge equipped with a pressure switch that monitors pressure changes and detects filter clogs, ensuring consistent performance and maintenance ease.

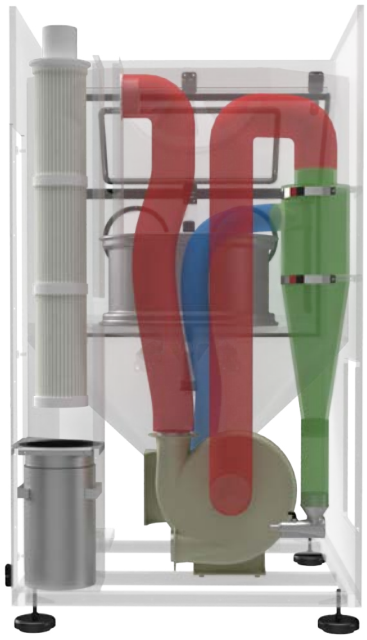

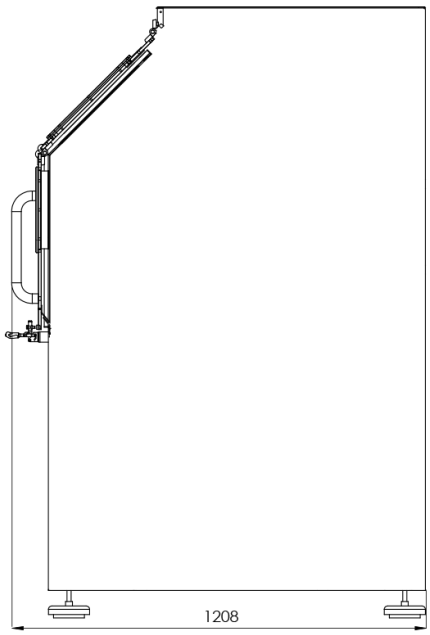

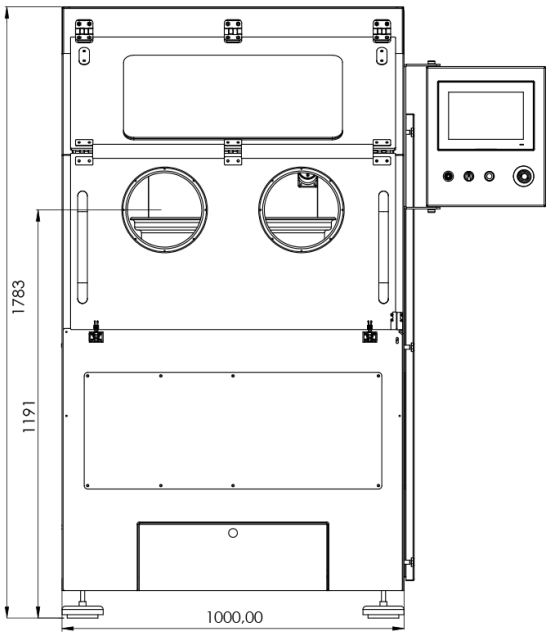

WMASM

ALUMINIUM SPRAYING MACHINE

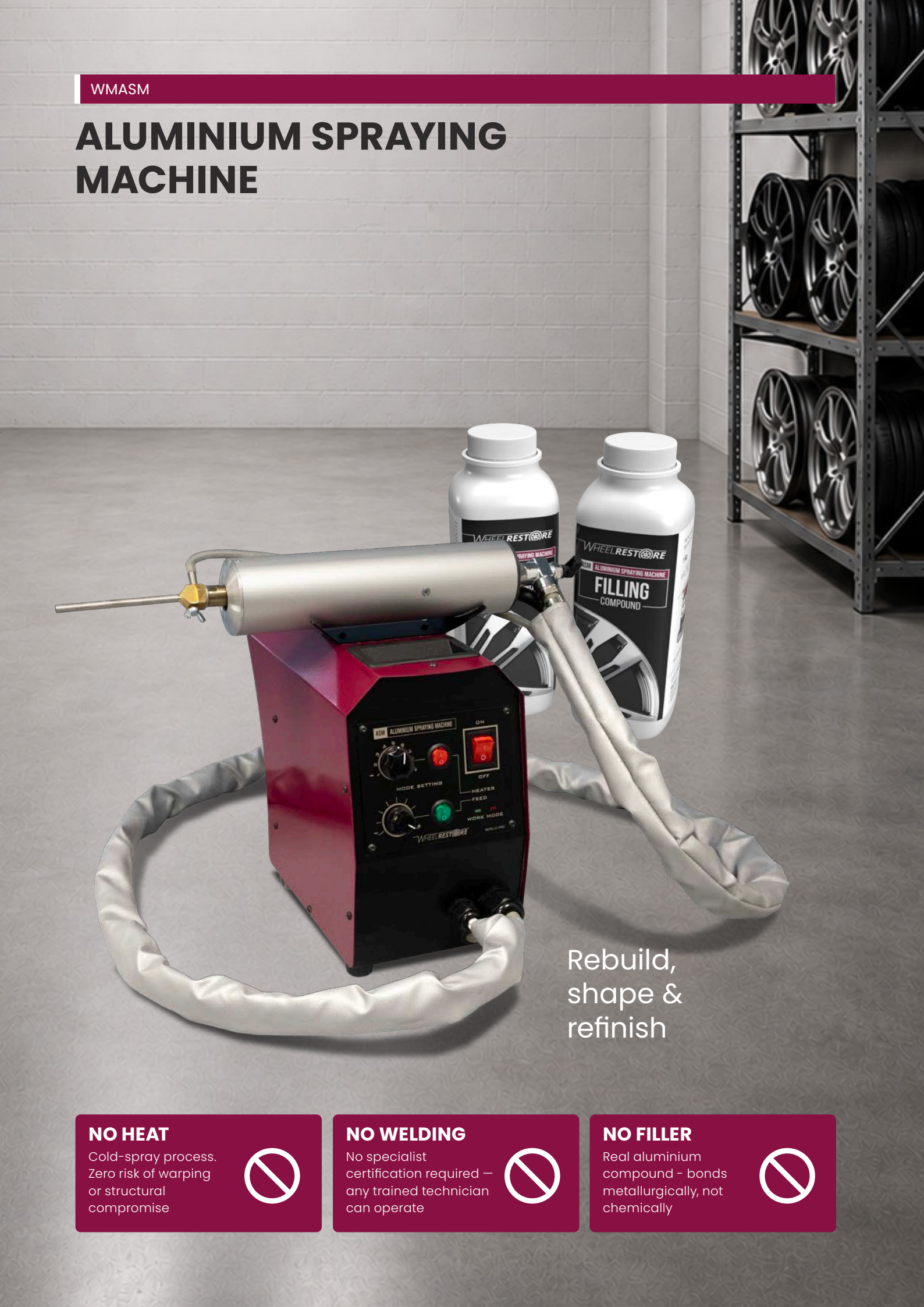

Rebuild, shape & refinish

NO HEAT
Cold-spray process. Zero risk of warping or structural compromise

NO WELDING
No specialist certification required – any trained technician can operate

NO FILLER
Real aluminium compound - bonds metallurgically, not chemically

Restore damaged aluminium without welding

Cold-spray rebuilds missing or damaged aluminium - structurally and cosmetically - in minutes.

The ASM fills and restores gouges, missing metal, cracks and deep kerb damage on alloy wheels using a two-compound aluminium spray system. Unlike TIG welding, the process requires no heat, no specialist certification and no risk of structural compromise. The result is a repair that can be machined, sanded and finished to an OEM-quality surface — indistinguishable from the original casting. The ASM is used inside the existing WM750 blast cabinet or the wheel spray booth — no additional equipment footprint required.











WMASM-1 · Top coat compound

High-gloss aluminium surface compound for final cosmetic restoration. Machineable and sandable to an OEM finish. Applied as the final layer over the filling compound for a flawless surface ready for diamond cutting or painting.

WMASM-2 · Filling compound

High-density fill compound for structural rebuild of missing material. Bonds directly to the bare aluminium substrate — filling deep gouges and missing sections before surface finishing. Applied before the top coat compound.

ASM vs. TIG welding

TIG Welding	ASM Cold Spray
Requires certified welder	Any trained technician
Heat - risk of distortion	Cold process - no heat at all
Slow — 30–60 min setup	Fast — under 15 min total
Dedicated welding equipment needed	Used inside existing blast cabinet
High consumable cost	Low consumable cost
Structural risk if overheated	No structural risk - no heat

Dimensions (H×W×L)	11.8 × 6.3 × 12.6 in	300 × 160 × 320 mm
Working air pressure	72.5–130.5 psi	0.5–0.9 MPa (5–9 bar)
Air consumption	15.9 CFM	0.45 m³/min (450 L/min)
Warm-up time	≤ 8 s	
Noise level	≤ 75 dB(A)	
Power supply	230 V, 1-phase, 50/60 Hz, 3.0 kW	

WM600 / WM650

AUTOMATIC WHEEL PAINTING MACHINE



DIRA
Danish Industrial Robotic Association
TECHNOLOGY AWARD WINNER

- Fully automated - start it and walk away
- Paints both sides of the wheel in a single cycle
- ATEX approved extraction
- Built-in IR & UV - no separate oven needed
- Handles wheels from 13" to 22"
- Full process: primer > base colour > clearcoat

Eliminating guesswork in wheel painting

World's first fully automatic Wheel Painting Machine

This patented wheel painting robot is a game-changer. It effortlessly paints both sides of a wheel from beginning to end, entirely automated, using either a conventional spray gun or an aerosol — eliminating guesswork and inconsistency from wheel painting, and cutting paint consumption and waste by up to 50% along the way.

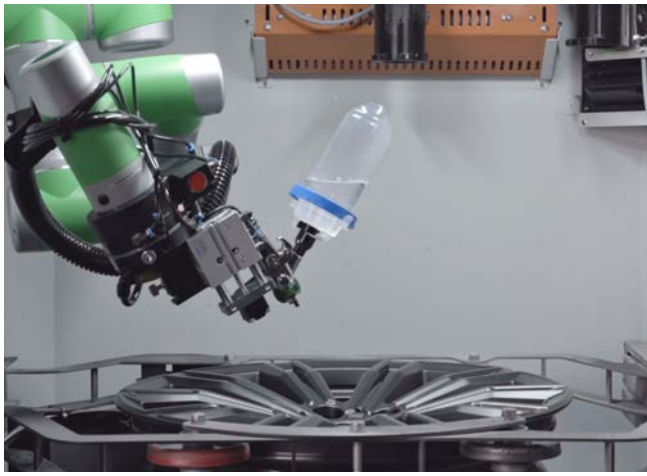



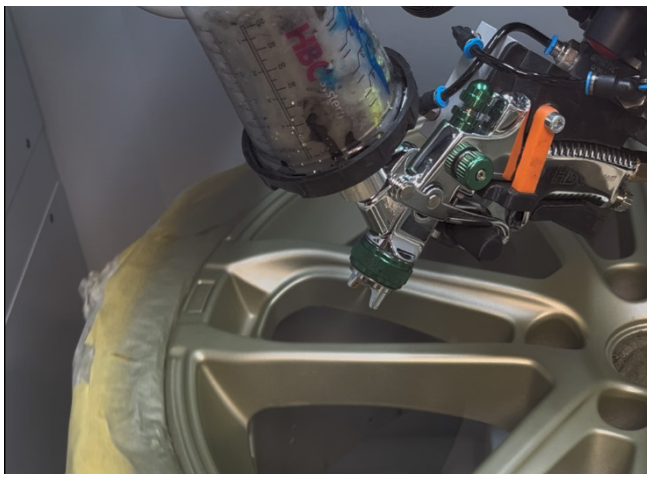

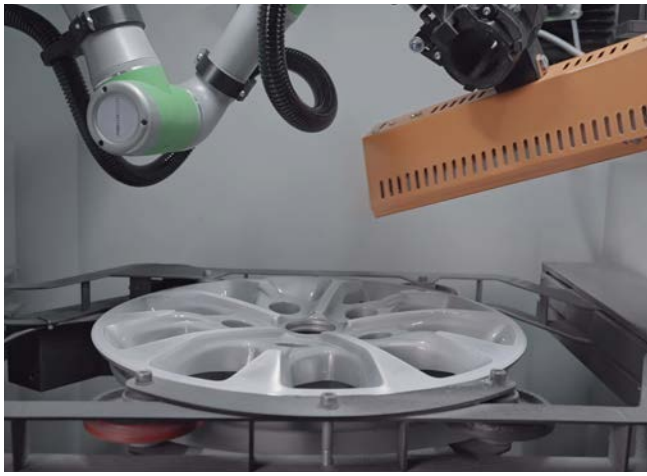

Up to 50% less paint & waste

Consistent, rotation-based coverage means reduced overspray and no guesswork — every rim gets the exact same paint thickness.

Full process, one cycle

Primer, base colour and clearcoat applied in a single automated pass, front and back.

Spray gun or aerosol

Choose a conventional spray gun or an aerosol can — or blend both across primer, base colour and clearcoat.

ATEX-approved extraction

Built-in centrifugal extraction safely removes paint fumes and overspray as standard.

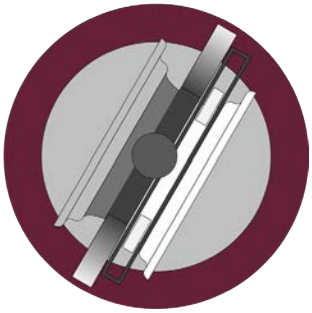

PATENTED

Dual-Side Painting

A vital part of its operation is the dual-sided (front/back) painting capability using either a regular spray gun or an aerosol can - including the application of primer, base colour and clearcoat.



AUTOMATIC

360° Rotation

The wheel automatically rotates in a smooth motion, ensuring steady material application that's impossible to duplicate by hand - consistent results, no irregularities.

Auto Paint Process - From Start to Finish

The Automatic Wheel Painting Machine operates with special HVLP aerosols and will automatically shift between variables (base colour, clear coat, primer). On the setup screen you can activate Primer, Colour, Clear Coat and then input the following application settings.

- Set one or dual sided
- Set from 1-3 layers
- Set drying type / time



Spraygun or aerosol

With the Automatic Wheel Painting Machine, the power is in your hands. Choose between a classic spray gun or an aerosol can for applying primer, base colour and clearcoat — or seamlessly blend both methods for your perfect finish.

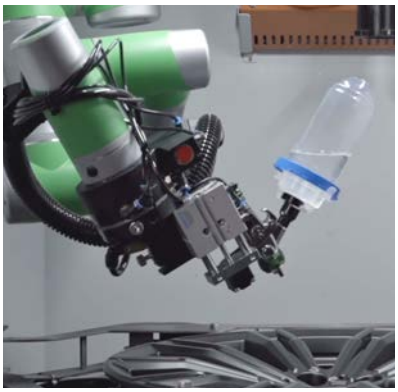



Wheel Library

Save your perfect settings and recall them anytime. A fully integrated Save a Wheel function lets the operator recall a paint job and repeat it with the stored settings, including ventilation and drying settings for air, infrared, or UV drying.

Teach the machine a wheel simply by entering key measurements — size, number of spokes, and so on. The machine stores the data for fast recall when repeating the exact same job, ensuring a consistent finish while building a reference index of OEM and aftermarket rims.







Built-in Curing Systems

ULTRAVIOLET, INFRARED, AIR

Infra-Red (IR) and Ultraviolet (UV) lamps are installed inside the machine to ensure the primer, base coat and clear coat are cured in the best and fastest way possible. Depending on the paint type selected in the program, the lamps switch on for the required time to fully cure the layers applied. Once cured, the rim can be removed from the machine ready for the tyre to be mounted.

UV Curing | IR Curing | Air

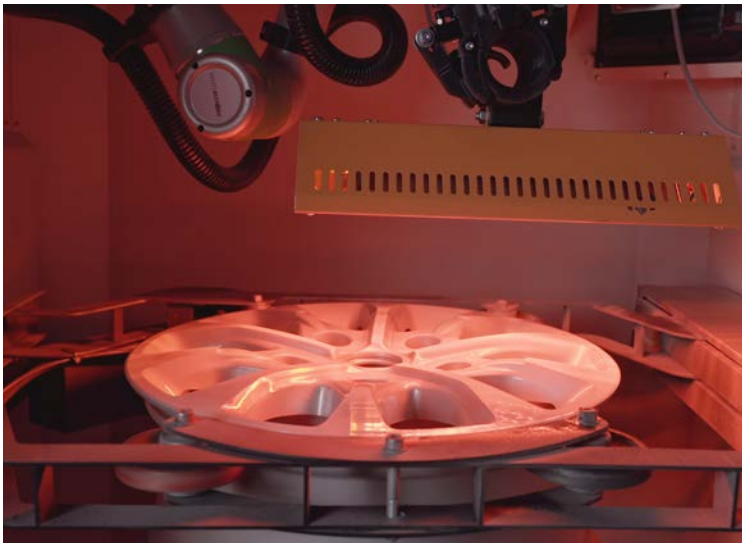

Wheel Paint Extraction

Effective airflow is essential during wheel painting, ensuring a clean finish and a safe working environment. The WM600's controlled airflow system minimises overspray while efficiently removing paint mist and fumes from the painting chamber.

Clean inlet air passes through a dedicated filter, preventing dust particles from contaminating the surface and helping ensure a consistent, high-quality finish.



The system maintains airflow of approximately 0.3 m/s, exceeding many traditional spray booths. An ATEX-approved centrifugal extraction fan safely removes paint fumes and overspray, with the option to connect to an external filter bank or spray booth if required.

ATEX-approved centrifugal extraction, standard on every unit



You don't need a trained painter.

The touchscreen guides every step — any operator can deliver a flawless cycle from day one.

Fast and consistent results.

Set it once, repeat it forever. Automated, repeatable cycles deliver the same finish on wheel one and wheel one thousand.

TYRE-ON WHEEL PAINT MACHINE



Introducing the WM650

Tyre-On

The WM650 brings dedicated tyre-on painting capability to the proven WM600 platform. Developed for workshops and mobile repair operations that prioritise speed, it keeps the tyre fitted throughout the painting process, reducing wheel handling and supporting faster turnaround.

Its compact footprint makes it particularly well suited to mobile setups, where space for tyre-removal equipment is limited. Combined with the WR-DCM3, the WM650 supports diamond cutting and tyre-on painting within a space-efficient mobile workflow.

The WM650 is a focused alternative for tyre-on painting, while the WM600 offers broader refinishing flexibility, including the ability to paint both sides of the wheel.

Unlike the WM600, the WM650 does not feature a rotating wheel cradle. It is designed specifically for painting, clear coating and curing the front face of the wheel.

Tyre-On painting capability

Fast turnaround

Same compact footprint, Mobile capability



Technical specifications



AUTOMATIC WHEEL
PAINTING MACHINE
WM600 / WM650

Dimensions (L×W×H)	39.3 × 39.3 × 70.5 in	998 × 998 × 1790 mm
Weight	540 lb	245 kg
Wheel diameter	13–22 in	
Display	12" industrial touchscreen	
Fan Type	ATEX centrifugal exhaust fan	
Airflow capacity	895 CFM	1520 m³/h
Fan speed	1,380 rpm	
Motor power	0.25 kW / 0.34 hp	
Maximum current	0.72 A	
Integrated airflow speed	1.0 ft/s	0.3 m/s
Power supply	220 V / 16 A, single-phase	

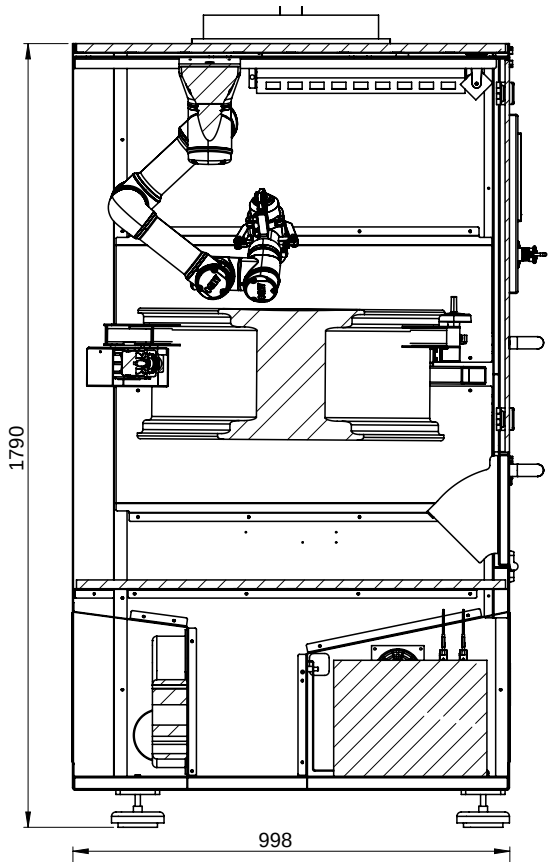

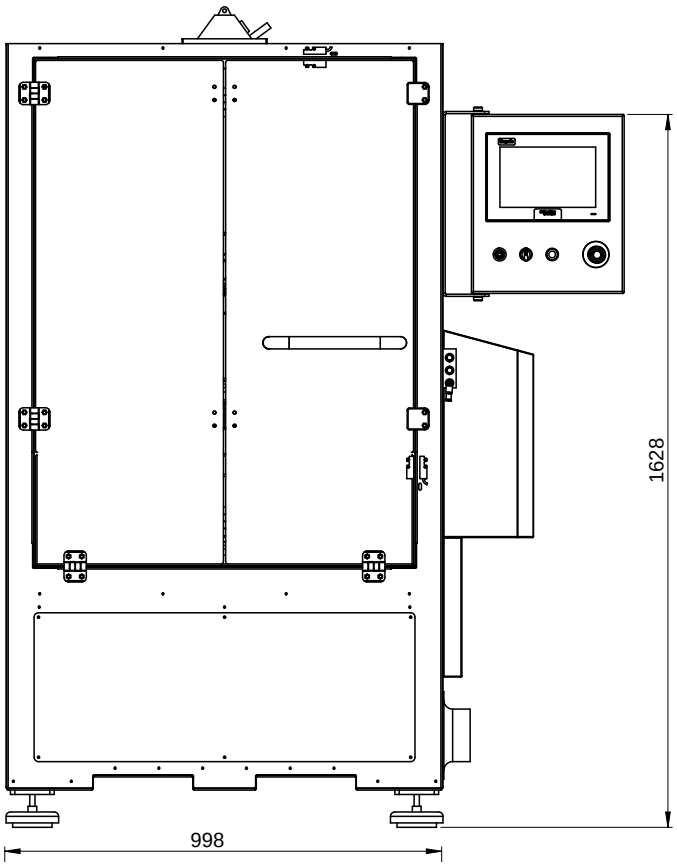

WM350

WHEEL STRAIGHTENERS



Correct wheel distortion

The Wheel Straightener gives technicians a dedicated setup for correcting flat spots and buckles in warped alloy wheels before cutting or refinishing.

Controlled operation

Electro-hydraulic pressure helps the technician apply controlled force precisely where correction is needed.

Retain more repair work

Correcting distortion in-house can reduce reliance on replacement wheels and external partners, while giving the workshop greater control over the repair sequence and turnaround.

Three solutions

Matching your workflow, available space and mobility requirements: the standard workstation, or with integrated tyre bead breaker, or the compact model.

Three configurations. One clear purpose.

Dedicated electro-hydraulic equipment for correcting flat spots and buckles before the wheel moves on to cutting or refinishing.



WM350

Electro-hydraulic Wheel Straightener

The WM350 combines a rotating axle, measuring tools and electro-hydraulic pressure in a stable professional workstation for regular alloy wheel repair.

Dimensions (H×W×L)	55.1 × 29.5 × 45.3 in	1,400 × 750 × 1,150 mm
Weight	529 lb	240 kg
Rim diameter	10–24 in	
Maximum rim width	10 in	
Hydraulic system motor	1 hp, 1,400 rpm	
Axle motor	0.75 hp, 1,400 rpm	
Working pressure	0–2,900 psi	0–200 bar
Sound level	35 dBA	
Power supply	220 V, single-phase	

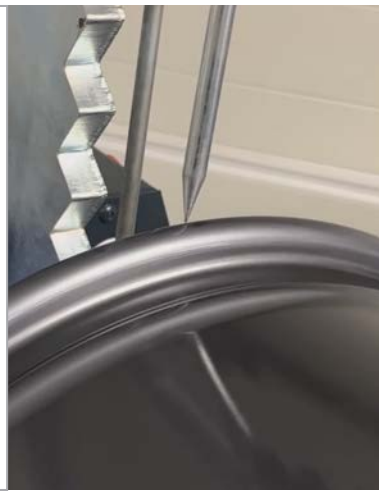



WM350-1

Straightener with Tyre Bead Breaker

The WM350-1 combines electro-hydraulic wheel straightening with integrated tyre bead access in one compact machine. It can be installed as a fixed unit or incorporated into a mobile repair setup.

- Two repair functions in one workstation.
- Controlled electro-hydraulic operation.
- Suitable for fixed or mobile use.



WM300

Compact Electro-hydraulic Straightener

The strong, lightweight WM300 brings wheel straightening to mobile installations and workshops where floor space is limited. It can operate with the tyre fitted or removed.

- Compact, space-conscious footprint.
- Designed with mobile use in mind.
- Works with or without the tyre fitted.



Support the repair around the wheel



WM200

Tyre Bead Breaker

Press the tyre bead away from the rim to create working access without a full tyre changer. Its compact footprint makes the WM200 particularly relevant to mobile repairers and workshops with limited space.

Floor area	23.0 × 19.1 in	585 × 485 mm
Working height	31.5 in	800 mm
Working pressure	80–120 psi	5.5–8.3 bar
Weight	132 lb	60 kg

Connect to a clean, dry air supply fitted with an oil lubricator



WM102

Wheel & Tyre Stand

A practical stand for cleaning, preparation and servicing. Three smooth rollers allow the wheel to rotate easily, while the versatile design securely supports wheels with or without the tyre fitted for convenient access throughout the job.

Dimensions (L×W×H)

14.9 × 27.5 × 30.7 in	380 × 700 × 780 mm

Dedicated spray space for wheels

WM888-1

Dual Wheel Spray Booth

A state-of-the-art spray booth designed specifically for alloy wheels. Capable of prepping or spraying two rims simultaneously. A secure wheel stand holds and rotates the wheel, providing full access to every angle. Modular and expandable design — optional cover for a fully enclosed environment.



Dimensions (L×W×H)	71" × 33" × 79"	1800 × 825 × 2000 mm
Configuration	Dual wheel capacity	
Wheel stands	Rotating - 360° access	
Optional	Booth cover	



Available add-ons

Spray Booth Cover

Magnetic front curtains. Fully enclosed environment for superior painting quality and workspace cleanliness.

WM888-COVER

Mobile Fan System

Portable extraction fan for flexible workshop setups and mobile operations.

SM500

Mobile Filter Unit

Additional filtration unit for paint mist and fumes. Used alongside the SM500 fan.

SM500F

High Density LED Lighting

Bright, even illumination across the full booth area for precise preparation and painting.

WM50

UNIVERSAL SPARE WHEEL

ROLL + SPIN

Weight
23.5 lbs

Dimension
22”x 2.5”

Speed Rating
5 mph /
8 km/h

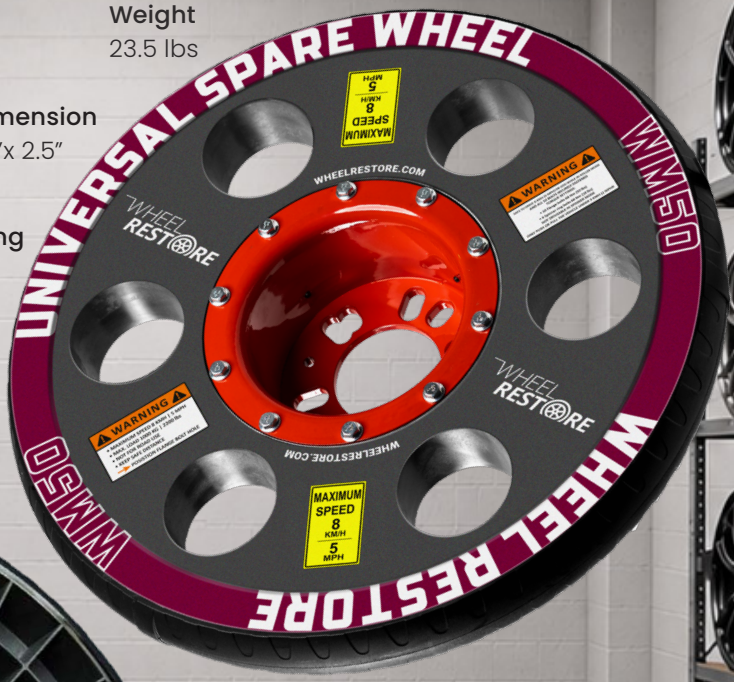



Max Load
2200 lbs / wheel

Strong, durable construction

No more crowded lifts

Swiftly attach the Universal Spare Wheel, relocate the vehicle, and free up the lift. Ideal during peak times.

EV-ready

In spinner mode, prevents hub movement during de-electrification - eliminating the risk of back-charging.

Simplified vehicle mobility

Bolts on in minutes. Facilitates rapid relocation or recovery of disabled vehicles in any environment.

Improve turnaround times

Indispensable in the paint booth - expedite setup and paint process. No waiting for a free lift.

A unique mobility solution for any workshop

The WM50 Universal Spare Wheel offers a unique mobility solution for standard and electric vehicles with frozen brakes or power loss.

It bolts onto the vehicle hub in minutes, enabling disabled cars to be pushed or pulled into a shop or onto a tow truck.

Compatible with AWD, FWD and RWD vehicles — works on inclines, gravel and uneven pavement. No extra parts required; uses factory nuts and bolts.



Roll Mode

Bolts onto the hub to create a smooth-rolling replacement wheel. Effortlessly push or pull vehicles lacking power or stuck in park - into a service bay, onto a tow truck or around the workshop. Works on inclines and uneven ground.

Spin Mode

When in spinner mode, the Universal Spare Wheel prevents hub movement during de-electrification of electric vehicles, eliminating the risk of back-charging the battery system. Essential for EV-handling workshops and dealerships.



Universal Wheel 4|5 version incl. Spinner	WM50-1
Universal Wheel 5|6 version incl. Spinner	WM50-2
Steel Centre 4|5 version	WM50-1-1
Steel Centre 5|6 version	WM50-2-1
Spinner Ring 4|5 version	WM50-1-2
Spinner Ring 5|6 version	WM50-2-2
Wedgenut 12pcs incl. bolts	WM50-W
Big Cart	WM50-C





View all wheel types in our easily navigated library with a simple QR Scan

OEM WHEEL PAINT SYSTEM · WP300 / WP600 / 998V2

WHEEL PAINT SYSTEM
100+ OEM-MATCHED COLOURS



20 bases.
Perfect
results.
Every time.

Perfect OEM match
Over 100 colours matched to the factory finish of OEM wheels — from Mercedes and BMW to Ferrari and McLaren.

Precision mixing app
The Colour Mixing Scanner and App eliminates guesswork - precise measurements with photo reference.

Fast drying
Rapid drying times boost productivity and enhance material durability compared to standard wheel paints.

Less paint usage
Concentrated formulation delivers superior results while reducing overall paint consumption.

Fully compliant
Aligns with the latest environmental legislation. All repairs meet regulatory requirements across global markets.

Non-isocyanate
Improved health and safety profile. Durable finish that mimics original powder coating. Pot life up to 8 hours.

Revolutionise your wheel painting process

The Wheel Paint Mixing System eliminates colour discrepancies, so there's no need to repaint both wheels on an axle just to get a perfect match.

Every mixture is guided by a colour scanner and companion Mixing App: a single scan takes you from raw surface to a ready-to-mix formula, complete with a confidence percentage so you always know how close the match is.

The app also includes a library of digital and real photos for every resulting colour, making reference and quality checks easy. Together, they take the guesswork out of colour matching.



1 Identify the Target Colour

Hold the scanner against the surface and press. The device instantly reads the colour and searches the integrated index for the closest available matches.



2 Review Matches

The system returns a ranked list of colour candidates with a percentage-based accuracy rating for each one - so you can make a confident, informed selection.



3 Get Your Mixing Formula

Select the desired colour and enter the quantity you need. It instantly calculates the exact formula for your chosen mixing system - no manual calculation required.

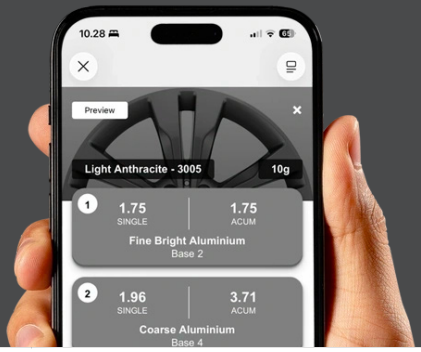

Three product configurations

WP300 · Wheel Paint Mixing System
The comprehensive mixing system — designed to simplify and streamline your wheel painting process. 20 bases, 100+ colours, mixing app included.

WP600 · Wheel Paint Mixing Trolley
The ultimate on-the-go painting solution. Includes spray gun and aerosol options. Flexibility and convenience for mobile or multi-bay operations.

998v2 · Wheel Paint System — Solvent
Specifically formulated for alloy wheels using solvent-based paints. For workshops requiring a solvent-based workflow.

Everything your DCM needs, organised & ready.

Diamond Cut Machine — WR-DCM3

WM808 Diamond Cutting Tip 0.2

Sharper tip — produces a finer and more glossy finish. Ideal for high-polish OEM finishes on premium alloys. Combined with the right settings, gives the best possible diamond-cut surface.



WM801 Diamond Cutting Tip 0.4

Rounder tip — a good all-rounder for different types of finish. The recommended starting point for most diamond cut repairs. Combined with the right settings for variable results.

WM806 Special Laser Tape - 10m × 2pcs

The only Wheel Restore approved tape for surface scanning. Correct structure, thickness and flexibility to avoid reflections from the alloy. Applied to the wheel face before each laser probing scan.





WM816 Radius Tool

Many wheels have a rounded edge. The radius tool helps select the correct radius to cut the edge exactly to OEM specifications — ensuring the finished edge matches the original wheel profile perfectly.





1838-WR Wheel Scraping / deburring Tool

Essential ceramic deburring tool for preparing alloy wheels before diamond cutting. It removes burrs and imperfections from spoke edges, helping ensure a smooth, precise final cut.

WM820 Paint gun Spacer

A multi-size paintgun spacer, providing four spacing options: 2, 3, 4 and 5 mm (0.08, 0.12, 0.16 and 0.20 in). Enables quick, repeatable positioning to help maintain consistent paint application.

DCM ACCESSORY TROLLEY

WM800-2 DCM Accessory Trolley

All accessories and consumables, plus additional DCM setup and cleaning tools, are included in the fully stocked Accessory Trolley. Open compartments, shelves and storage bins keep everything organised and within easy reach.



From surface preparation to final protection

Diamond cut clearcoats



845 **Diamond 2K Clearcoat Package 3L**

Clearcoat 1L + Hardener 1L + Thinner 1L + mixing cups. 2-component medium-solid clearcoat based on high-quality acrylic resins. UV resistance. Direct adhesion on bare ferrous and non-ferrous metals.

Also available in

850 Stormy Black **870** Matt **851** Mini Gold



Wheel Paint - 3-in-1

A professional 2K coating developed specifically for alloy wheels, combining primer, base colour and clearcoat in one product. It can be applied to bare metal or suitably prepared existing coatings, covers sanding marks up to P180 and provides a full colour change in two coats. The non-isocyanate formulation delivers UV protection and a durable finish while reducing the need for separate coating stages.

Available in

846 Bright Silver
847 Satin Black
848 Black
860 Gun Metal

Blasting powders

Varying from light preparation to full paint stripping before primer, paint and clearcoat application. All powders can be reused — significantly reducing waste versus traditional sandblasting methods.



WM710-1 **Rough**
Blasting Powder, 10 kg



WM710-2 **Medium**
Blasting Powder, 10 kg



WM710-3 **Fine**
Blasting Powder, 10 kg



SOFTWARE & CONNECTIVITY

THE CONNECTED WHEEL RESTORE WORKSHOP

MACHINE

Operate

Guided processes, stored programmes and live machine information.



APP

Document

Create a digital record of the wheel and completed repair.



SAS

Support

Bringing machines, service information, learning and support requests together.



Information that follows the repair

Wheel Restore App

The Wheel Restore App makes documenting repair jobs fast, simple, and professional. After each job, the DCM3 automatically creates a QR code linked to the repair record. From there, everything you need is available directly in the app – no hassle, no extra steps.



- Email Repair card to customer
- Easily print Repair Sticker + QR code
- Document and trace all repairs
- Store the data for later retrieval

Download on the App Store

ANDROID APP ON Google play

scan to try it out
CE29346
0.34 mm

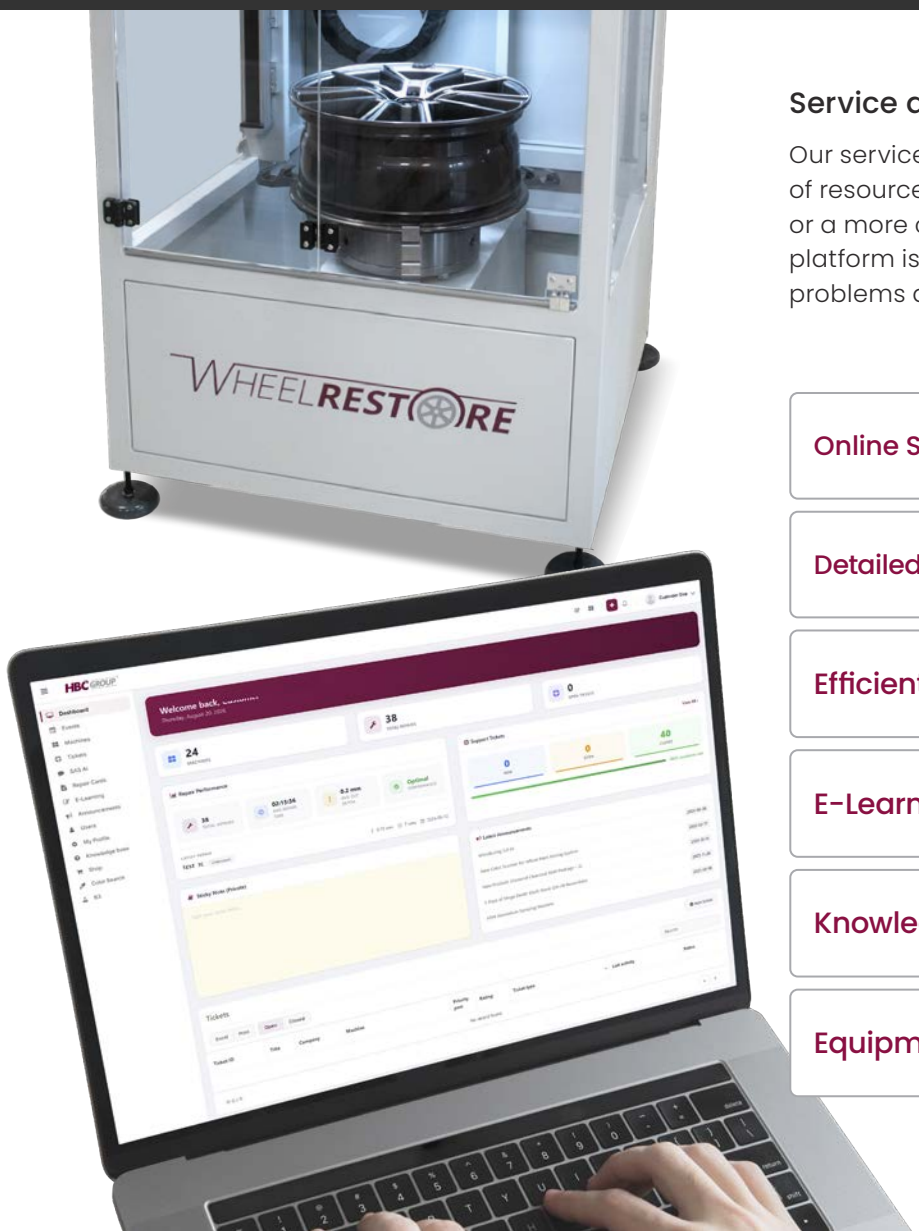

Service and Support Platform

Our service and support portal offers a wealth of resources. Whether you have a quick query or a more complex issue, our online support platform is designed to help you swiftly resolve problems and prevent unnecessary downtime.

- Online Support Ticket System
- Detailed Repair Card Overview
- Efficient Task Management
- E-Learning Platform
- Knowledge Base
- Equipment Overview

HOW TO GET STARTED

THREE WAYS TO GET THE MACHINES INTO YOUR SHOP

Whether you want full ownership, a hybrid approach, or a risk-free all-in package, we have an option for you. Every path gives you access to the same machines — the difference is how we partner with you along the way.



OPTION 1

Buy outright

Full ownership from day one. You buy the machines outright — no ongoing commitment beyond what you choose to add later.

- ✓ Full equipment ownership
- ✓ No ongoing commitment
- – Service & maintenance not included
- – Downtime risk sits with you

Time to true profit

Longest — large capital recovery period

OPTION 2

Buy + service agreement

Own the machines at a reduced price in exchange for a 12-month service commitment. We take ownership of keeping them running at full performance.

- ✓ Full ownership from day one
- ✓ Reduced machine price
- ✓ Priority support & extended warranty
- ✓ Software updates included
- ✓ Listed on Repair2Care. We drive customers to you

Time to true profit

Faster — lower capital to recover

OPTION 3

All-inclusive monthly

Machines and service bundled into one monthly amount. Start with one core machine and add the second to unlock the full four-machine workshop.

- ✓ No large upfront investment
- ✓ Equipment + service in one package
- ✓ Faster return on investment
- ✓ Add second machine + blaster & straightener included free
- ✓ 30–40% faster throughput with AI performance unlock

Time to true profit

Fastest — no capital recovery period

Build your setup one machine at a time

Start with one core machine. Add the second and your blasting machine and straightener are included at no extra monthly cost. The full four-machine workshop, unlocked.

START HERE



Diamond cut machine

ADD SECOND MACHINE



Wheel paint machine

Full setup — 4 machines

One operator. Single 220V socket. Fits almost any space. We handle installation.

ONE-TIME INSTALL We handle everything

Wheel Blasting Machine	Included free
Wheel straightener	Included free

What a service agreement actually gets you

This isn't a standard maintenance plan. It's how we stay invested in your business after the machines are installed — keeping you fast, operational, and growing.

First-priority support

When something needs attention, you jump the queue. We stop what we're doing and respond to service agreement customers before anyone else.

AI performance unlock

Our AI engines are activated on all machines — cutting, spindle, and painting run significantly faster than the standard configuration.

Free replacement machine

If a machine needs to come back to us for repair, we send a replacement so your operation keeps running. Your downtime is as close to zero as we can make it.

Predictive maintenance

Machines monitor themselves. Consumables are flagged before you run out, and potential issues are caught before they cause problems - not after.

50% off all spare parts

For the life of your agreement, every spare part comes at half price. You committed to us - we commit back with the same energy.

Listed on Repair2Care

We actively drive wheel repair customers to your location through our Repair2Care platform - SEO-optimised and advertised. Your business grows, ours does too.

The service agreement also includes extended warranty coverage, annual virtual service visits, software upgrades, ROI optimisation support, and a full suite of connectivity and data tools — including repair documentation, CO^2 tracking, and before-and-after photo automation. Ask your sales contact for the full feature breakdown.

BRING THE WORKSHOP TO THE WHEEL

On-site alloy wheel repair

Demand for on-site wheel repair is rising fast — driven by convenience, speed and cost-efficiency. Every Wheel Restore mobile solution is built around the same compact, ultra-quiet WR-DCM3 that powers our fixed workshops, so you get identical OEM-quality results wherever the job takes you - whether that's a van you fit out yourself, or a fully built trailer ready to tow.



Compact Design

The WR-DCM3 fits all major high-roof vans, box trucks and trailers — everything needed for a workshop on wheels.

Silent Power

Runs on a single-phase 230/110 V, 16 A supply. Ultra-quiet operation makes repairs possible on residential streets, in car parks, or on a service drive.

High-Capacity

Repair up to 4 wheels per hour, with minimal consumables and no oil-based lubrication — matching the standards of a static shop.

Two ways to go mobile



VAN BUILD

Fit it into the van you already run

- Fits Mercedes Sprinter, VW Crafter, Ford Transit & similar high-roof vans
- Passes through the side door - leaves the rest of the van free to configure
- Room to add a spray bay, blasting cabinet or paint robot as you grow



REPAIR TRAILER

A complete workshop, ready to tow

- Built-in spray room, compressor, storage and prep station - nothing to configure
- Tow with your existing vehicle - no dedicated van needed
- Full specification on the next page

A Complete Workshop, Ready to Tow

The Alloy Wheel Repair Trailer is a fully equipped mobile workshop, built around the same WR-DCM3 used across every Wheel Restore setup. A dedicated prep station with retractable turntable, a 3HP compressor with twin 50L air receivers, and a complete spray room mean technicians can perform every stage of the repair — cutting, prepping and painting — directly on site.

Plug and play - no build, no configuration, no downtime



Dimensions (L×W×H)	13 ft 9.4 × 7 ft 0.6 × 7 ft 2.6 in	4,200 × 2,150 × 2,200 mm
Weight	5,732 lb	2,600 kg



Main Work Area

WR-DCM3 Diamond Cut Repair Machine
Alloy wheel prep station, retractable turntable
Large metal storage cupboard + 2 auto-latching drawer units
Daylight LED lighting
First aid, eye wash & fire extinguisher

Spray Room

Recirculating spray booth, spray & dry speed settings
Alloy wheel turntable + 2× ATEX LED lights
Infra-red curing lamp on articulated arm
3-stage air filter regulator, auto-drain
COSHH storage + wheel drying/cooling rack



Rear Section

3HP / 2.2kW compressor, 2× 50L air receivers
Auto-drain water filter, auto-recoil air line & power lead
Trolley jack, axle stand & Universal Wheel storage
Tyre pressure & wheel nut torque chart

Body & Chassis

Galvanized steel chassis, Twin braked axles, lockable braked coupling, spare wheel. Non-slip phenol-coated plywood base, rot-proof GRP panels. Stainless steel fixtures, twin rear doors, side access door

NEXT STEP

Build the wheel repair capability your operation needs.

Start with one process or connect the complete workflow. Wheel Restore can help configure the equipment, installation, training and support around your workshop, mobile operation and expected repair volume.





Book a demo at **wheelrestore.com**

Explore the range and request a consultation. We'll show you the machines running and build an ROI model for your setup.

HBC SMART REPAIR
EQUIPMENT & SOLUTIONS

HBC Smart Repair · Hobrovej 963, DK9530 Stoevring, Denmark
Tel. +45 7022 7070 · wheelrestore.com · hbcsystem.com